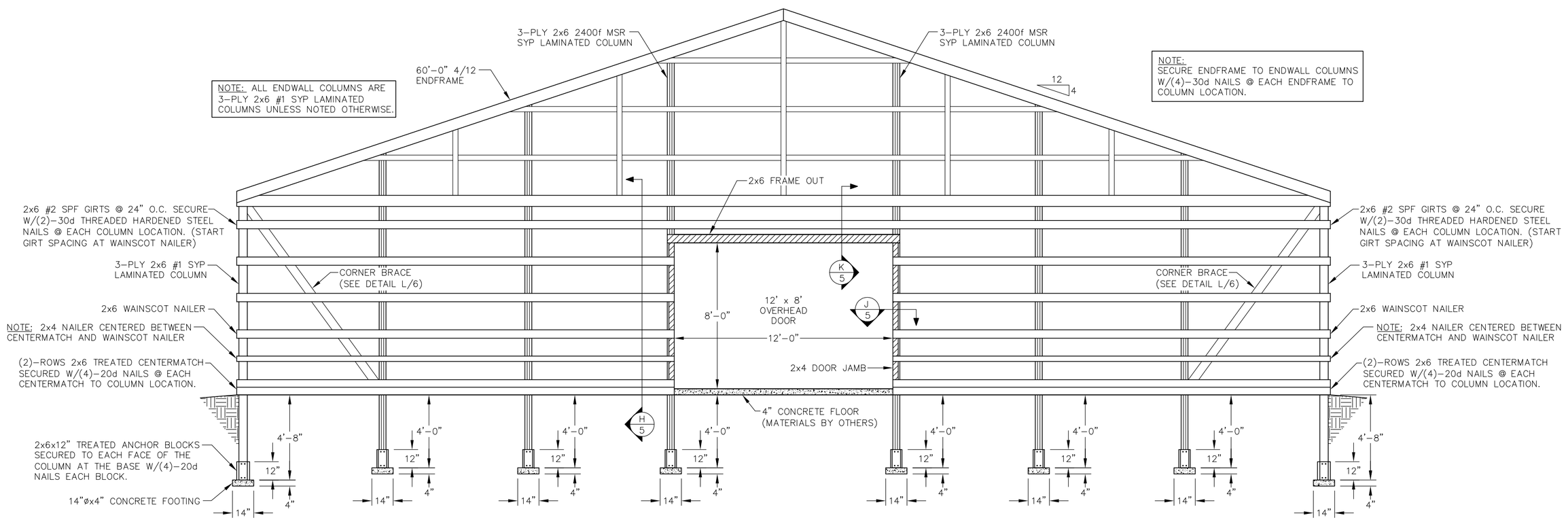

EAST & WEST ENDWALL FRAMING
SCALE: 1/4"=1'-0"

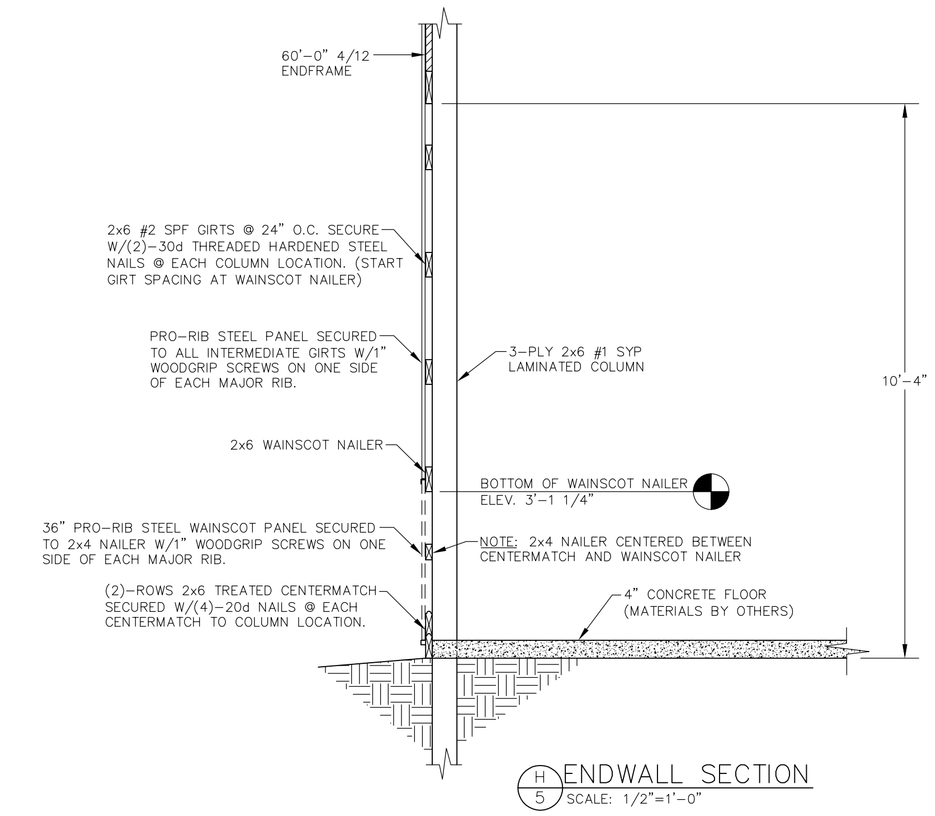

H 5 ENDWALL SECTION
SCALE: 1/2"=1'-0"

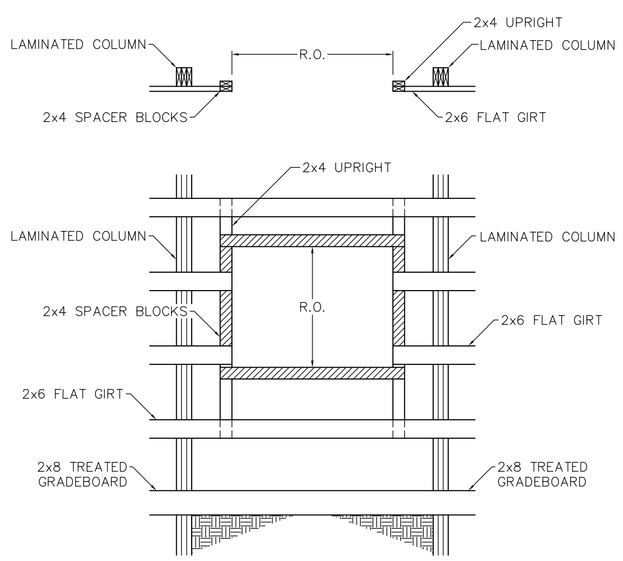

WINDOW FRAMING
SCALE: 3/8"=1'-0"

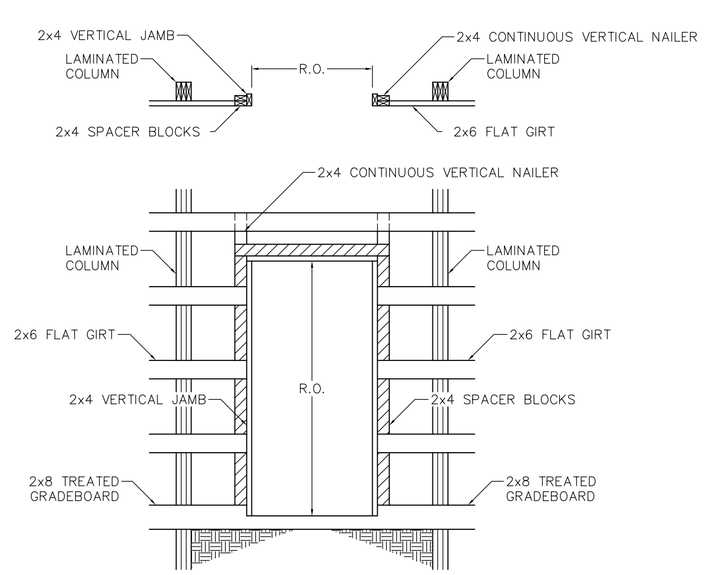

SERVICE DOOR FRAME-OUT
SCALE: 3/8"=1'-0"

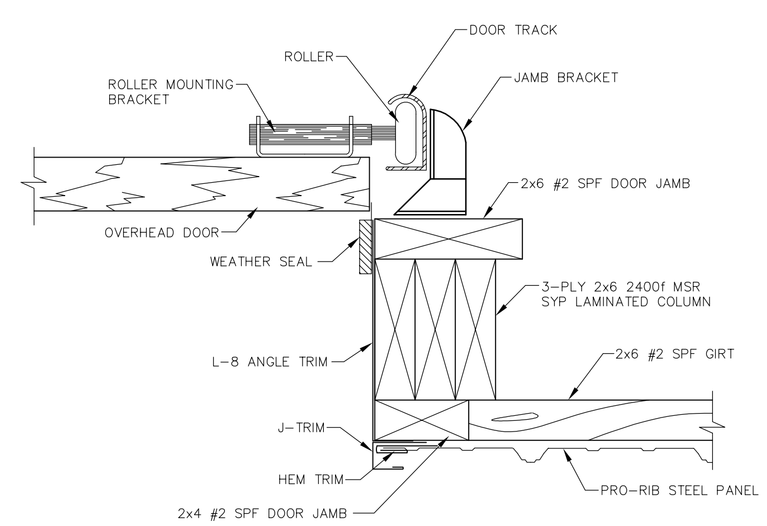

J 5 OVERHEAD DOOR JAMB DETAIL
SCALE: 3"=1'-0"

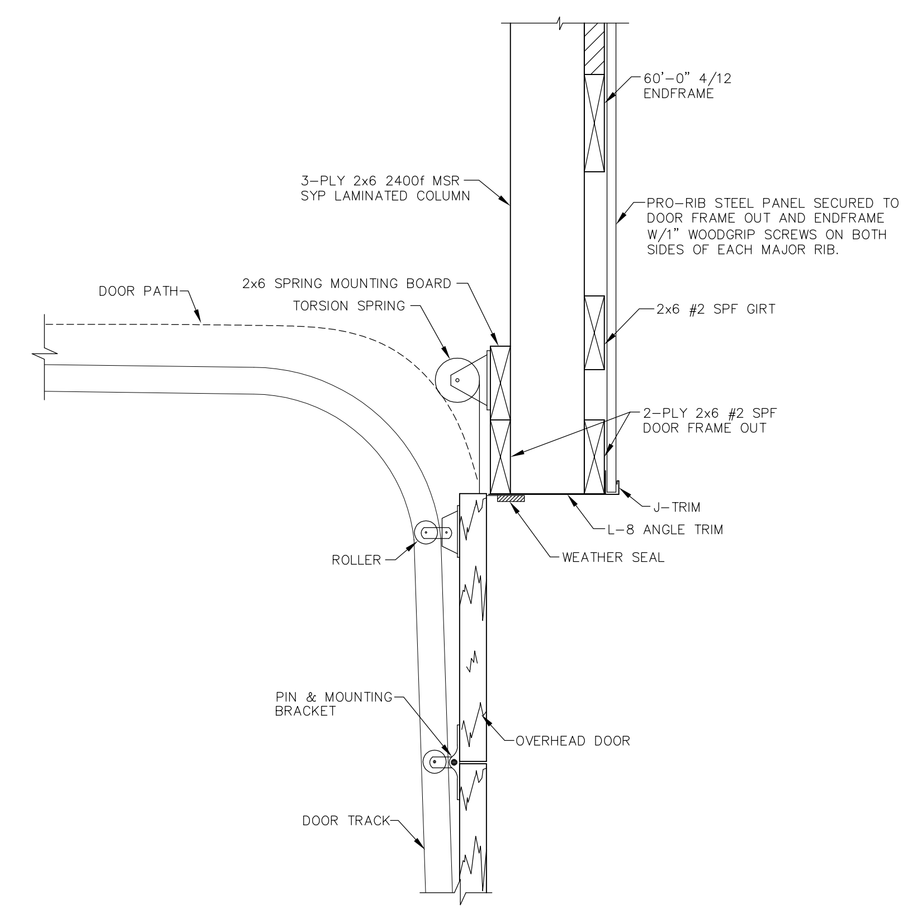

K 5 OVERHEAD DOOR FRAME OUT DETAIL
SCALE: 1 1/2"=1'-0"

ENGINEERING SERVICES
5311 KANE RD. EAU CLAIRE, WI 54703 (715) 876-5555

PROJECT TITLE:
YOUR BUILDING
ANYWHERE, USA

SHEET TITLE:
ENDWALL FRAMING AND ENDWALL DETAILS

REVISIONS			
NO.	DATE	DESCRIPTION	BY
1			
2			
3			
4			

PROFESSIONAL ENGINEER: XXXXXXXXXX
PLAN DESIGNER: XXXXXXXXXX
DRAWN BY: XXXXXXXXXX
FILE NAME:
DATE:
SCALE: AS NOTED
SHEET NO. 5 OF 7