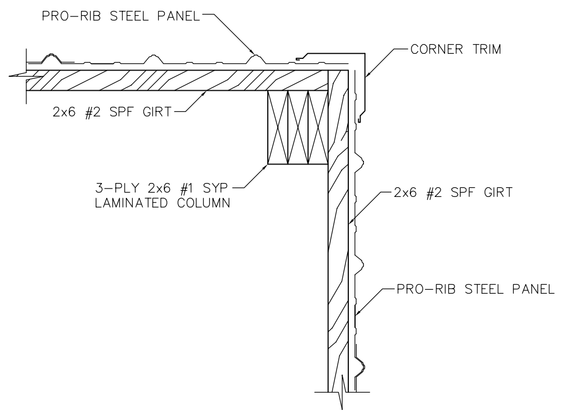

CORNER TRIM DETAIL

SCALE: 1 1/2"=1'-0"

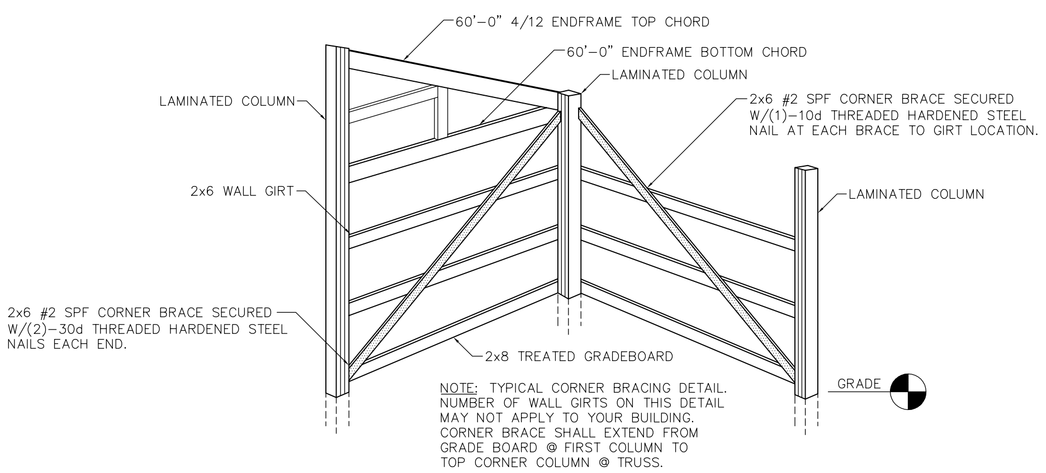

L/6 CORNER BRACE DETAIL

NOT TO SCALE

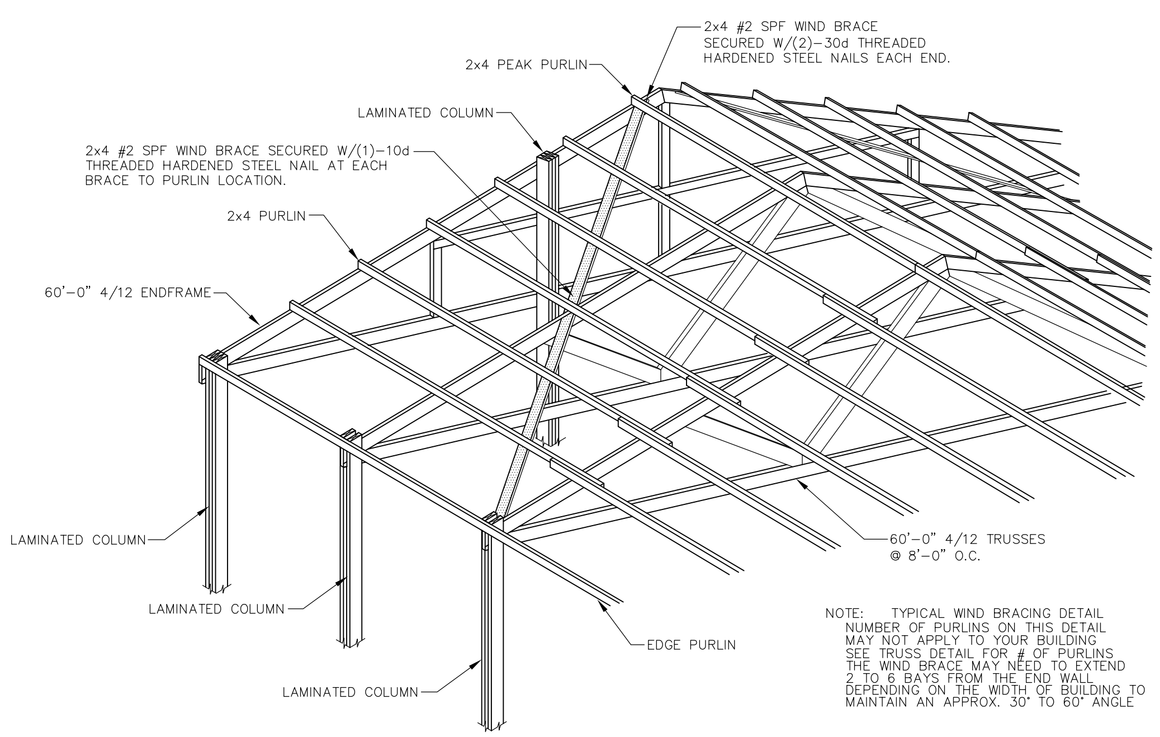

M/6 WIND BRACE DETAIL

NOT TO SCALE

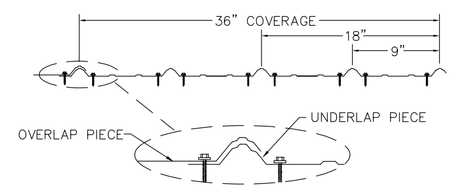

S-1/6 STEEL LAP DETAIL (ENDS)

NOT TO SCALE

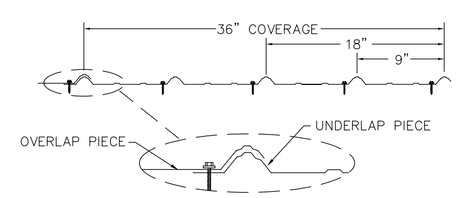

S-2/6 STEEL LAP DETAIL (INTERMEDIATE)

NOT TO SCALE

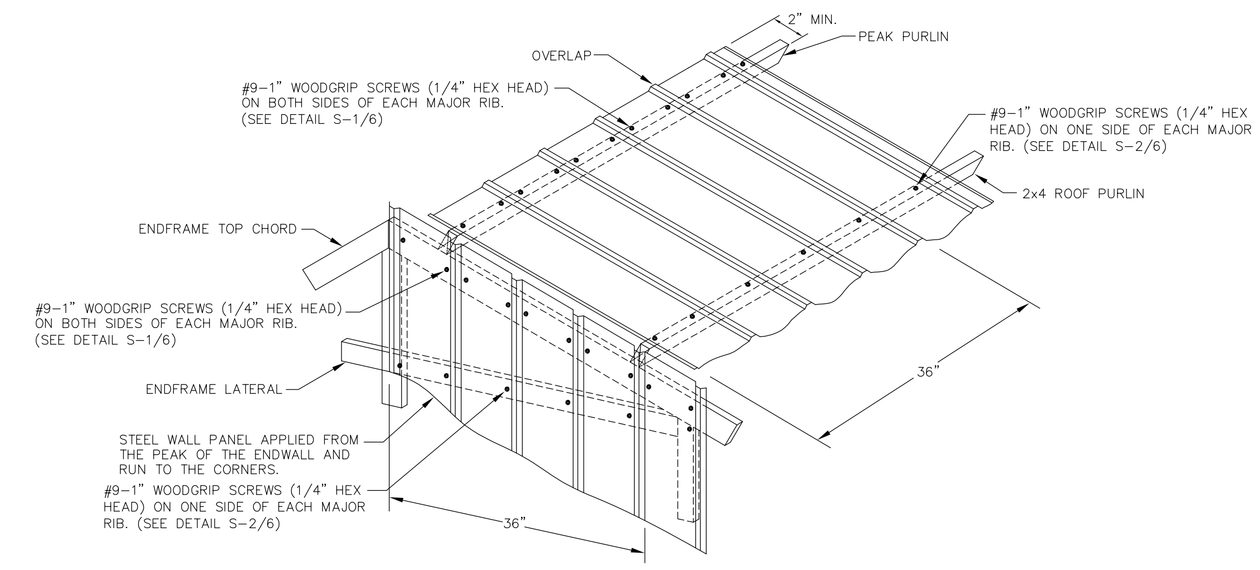

ROOF & ENDWALL STEEL APPLICATION @ GABLE PEAK & INTERMEDIATE

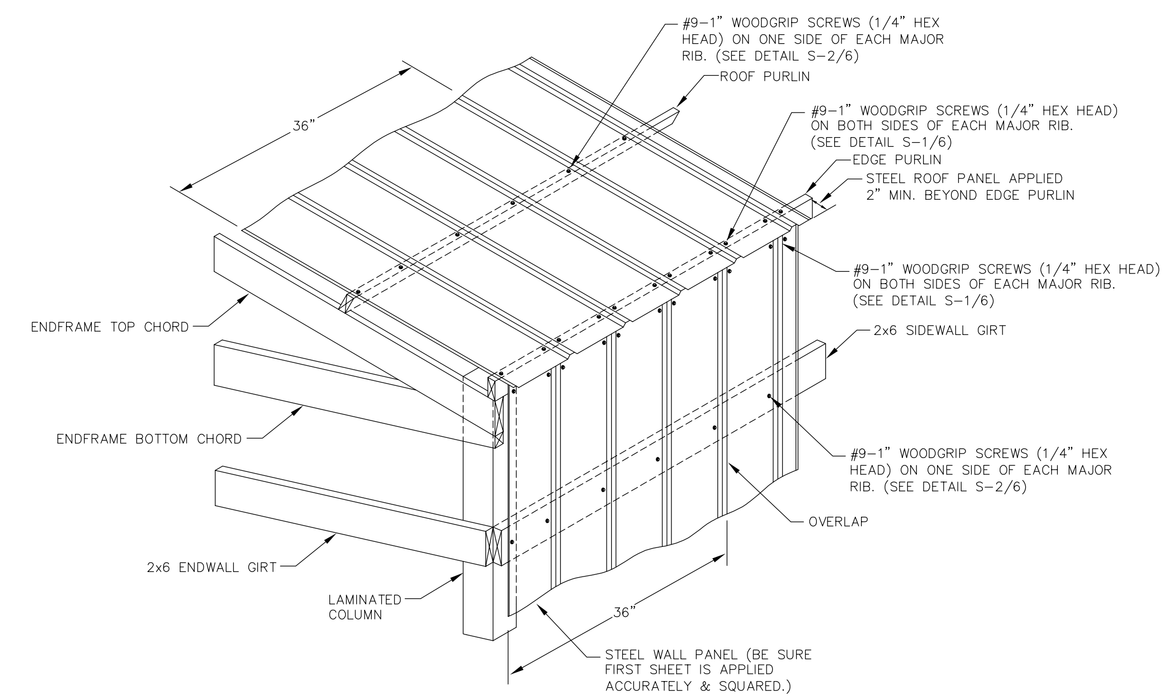

ROOF & SIDEWALL STEEL APPLICATION @ EAVE

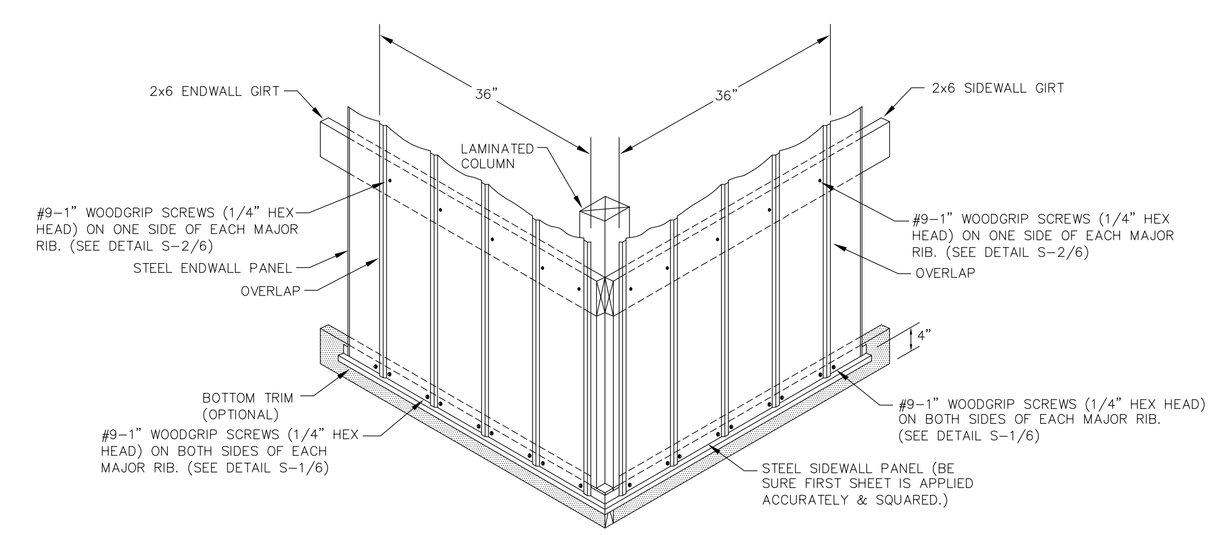

WALL STEEL APPLICATION @ GRADEBOARD

STEEL APPLICATION DETAILS

ENGINEERING SERVICES
5311 KANE RD. EAU CLAIRE, WI 54703 (715) 876-5555

PROJECT TITLE: YOUR BUILDING
ANYWHERE, USA

SHEET TITLE: MISCELLANEOUS FRAMING DETAILS AND STEEL DETAILS

REVISIONS			
NO.	DATE	DESCRIPTION	BY
1			
2			
3			
4			

PROFESSIONAL ENGINEER: XXXXXXXXXX
PLAN DESIGNER: XXXXXXXXXX
DRAWN BY: XXXXXXXXXX
FILE NAME:
DATE:
SCALE: AS NOTED
SHEET NO. 6 OF 7